Hybrid Electric Vehicle Architectures

Series, parallel, mild, strong, full, power-assist, one-mode, two-mode…..

Hybrid Electric Vehicle Powertrains (HEV-PT)
Tom Bradley and Ken Stanton

Objectives

- Recall the means by which HEVs improve fuel economy
- How do different architectures accomplish that?
- What are some tradeoffs that HEVs require to achieve improved fuel economy?

RECALL - Characteristics of HEV Drivetrains (In approximate order of importance to efficiency)

- Isolation of Engine from Vehicle Operating Conditions
- Regenerative Braking
- Engine Downsizing
- Electric Drive Mode
- Electrified Accessories
- No Engine Idle
- Energy Banking

H/EV Architectures

1 Main EV Architecture

- 1 Speed EV

3 Main HEV Architectures

- Series
- Parallel
- Power-Split

Main EV Architecture

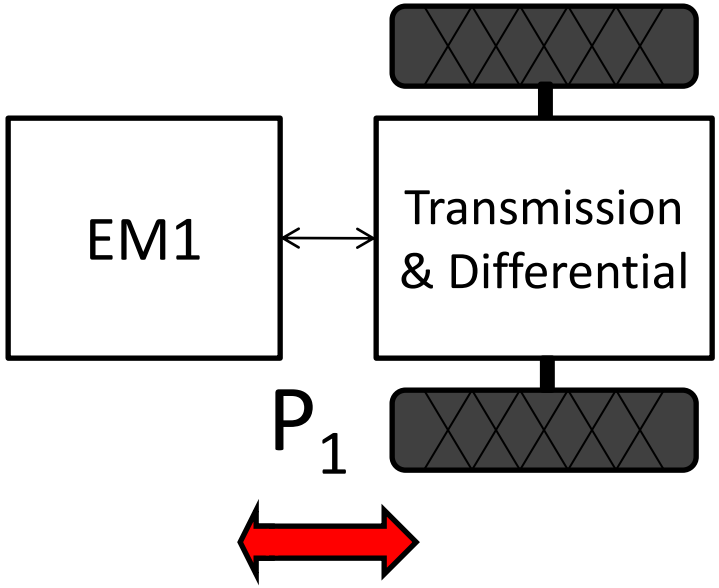

Series Hybrid

– Two power sources feed a single powerplant

Note: Can act as a Strong or Mild Hybrid

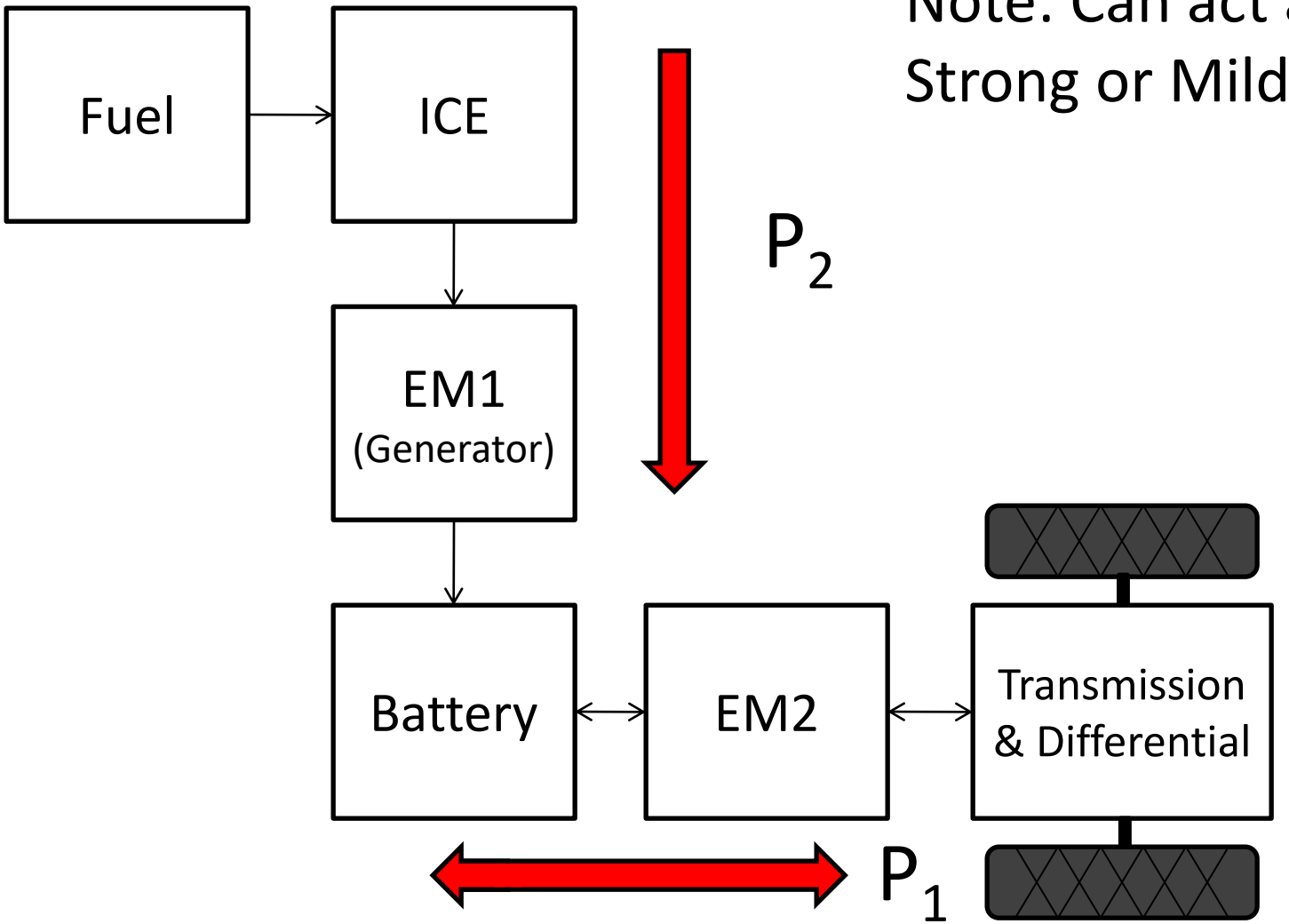

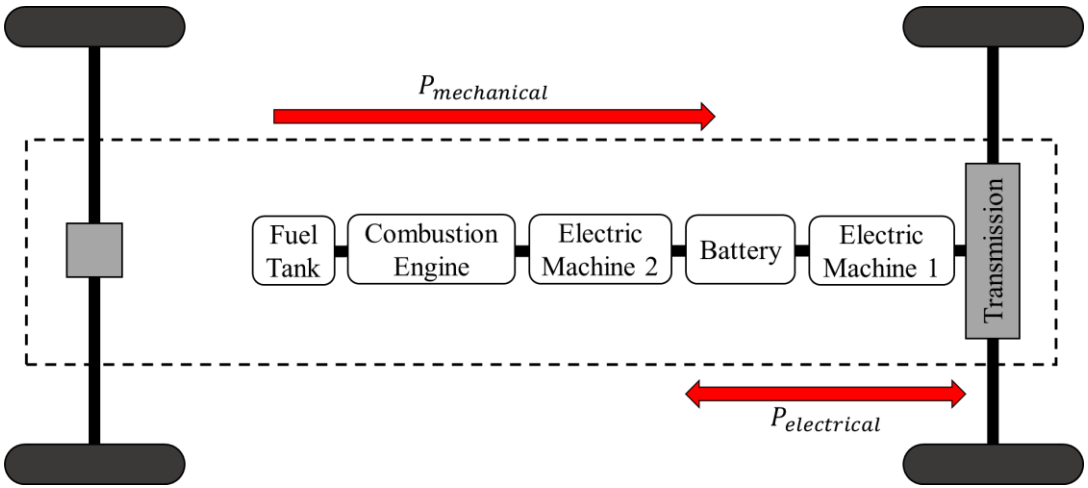
$P_{mechanical}$
Fuel Tank
Combustion Engine
Electric Machine 2
Battery
Electric Machine 1
Transmission
$P_{electrical}$

https://www.baesystems.com/en/product/series-e
SERIES-ER
HYBRID ELECTRIC

Series Operation Modes

1. Pure electric traction – propelled by batteries
2. Pure ICE traction – engine to generator propulsion
3. Hybrid traction – both engine and batteries propel
4. Engine traction and battery charging – engine-generator both propels and charges batteries
5. Regenerative braking – Engine-generator off and the motor operates in reverse to charge batteries
6. Battery charging – no propulsive force provided and engine-generator charges batteries
7. Hybrid battery charging – both the engine-generator and the electric motor charge the batteries

Series Advantages

- Mechanical decoupling of the engine from the drive wheels allows operation anywhere on its speed-power curve – can aim for optimum operation as much as possible
- Electric motors spin to very high rpm – therefore the transmission unit requires less gears, is cheaper, and lighter
- Can use one electric motor per wheel – implications for AWD, traction and stability control
- Control systems are relatively simple

Series Disadvantages

- ICE energy converted twice (mechanical to electrical to mechanical) and therefore losses can be significant
- Requires a generator and its associated cost and weight
- Requires a large electric motor since it is the only powerplant directly propelling the vehicle
- Requires a full-sized ICE if battery does not have a high storage capacity (e.g., is not a PHEV).

Parallel Hybrid

– ICE and Electric Machine individually, or in combination, propel the vehicle

E.g.,

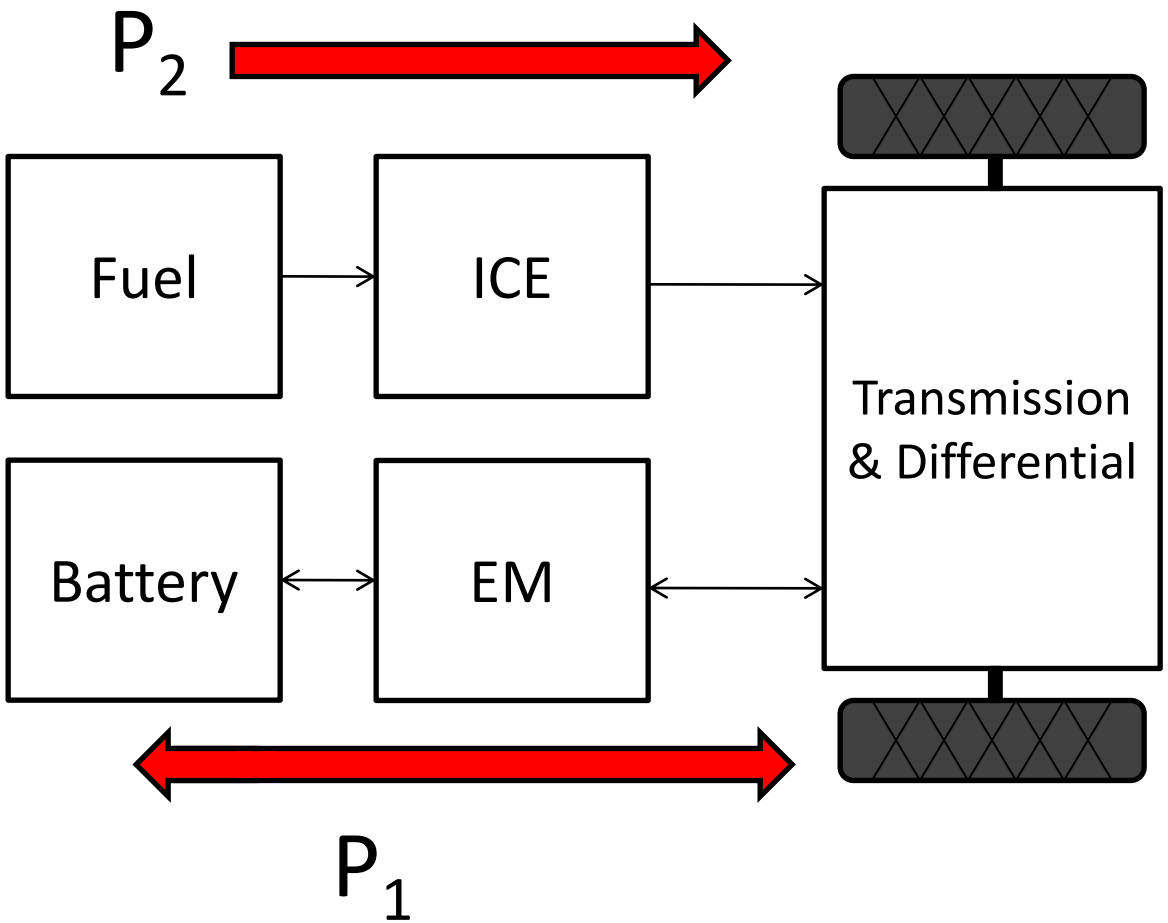

Toyota Tacoma Hybrid

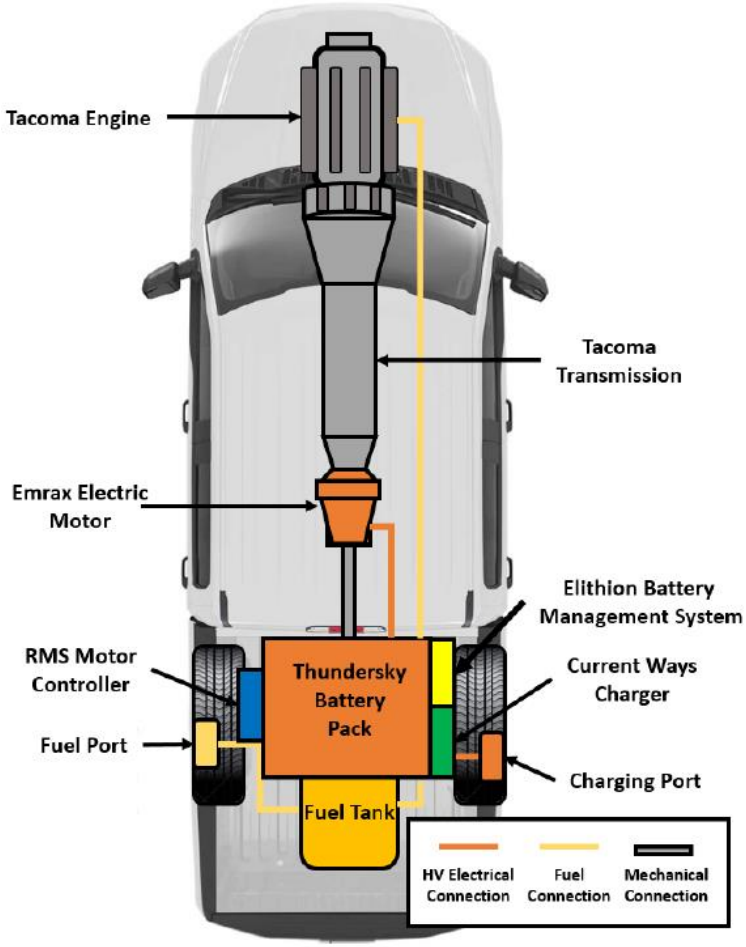

Parallel Operation Modes

1. Pure electric traction – propelled by batteries at low speed
2. Pure ICE traction
3. Hybrid traction – both engine and batteries propel
4. Engine traction and battery charging
5. Regenerative braking
6. Battery charging – ICE propels and electric machine charges battery (at the expense of the ICE)

Parallel Advantages and Disadvantages

- Advantages
  - Speeds and Torques of the two powerplants can be chosen independently (within constraints)
  - The powerplants can be smaller, and therefore cheaper and more efficient
- Disadvantages
  - More complex than series – in particular, control is far more complex

Power-Split Hybrid

Direct mechanical power path *and* an electromechanical path for the ICE. Sometimes termed a series-parallel hybrid.

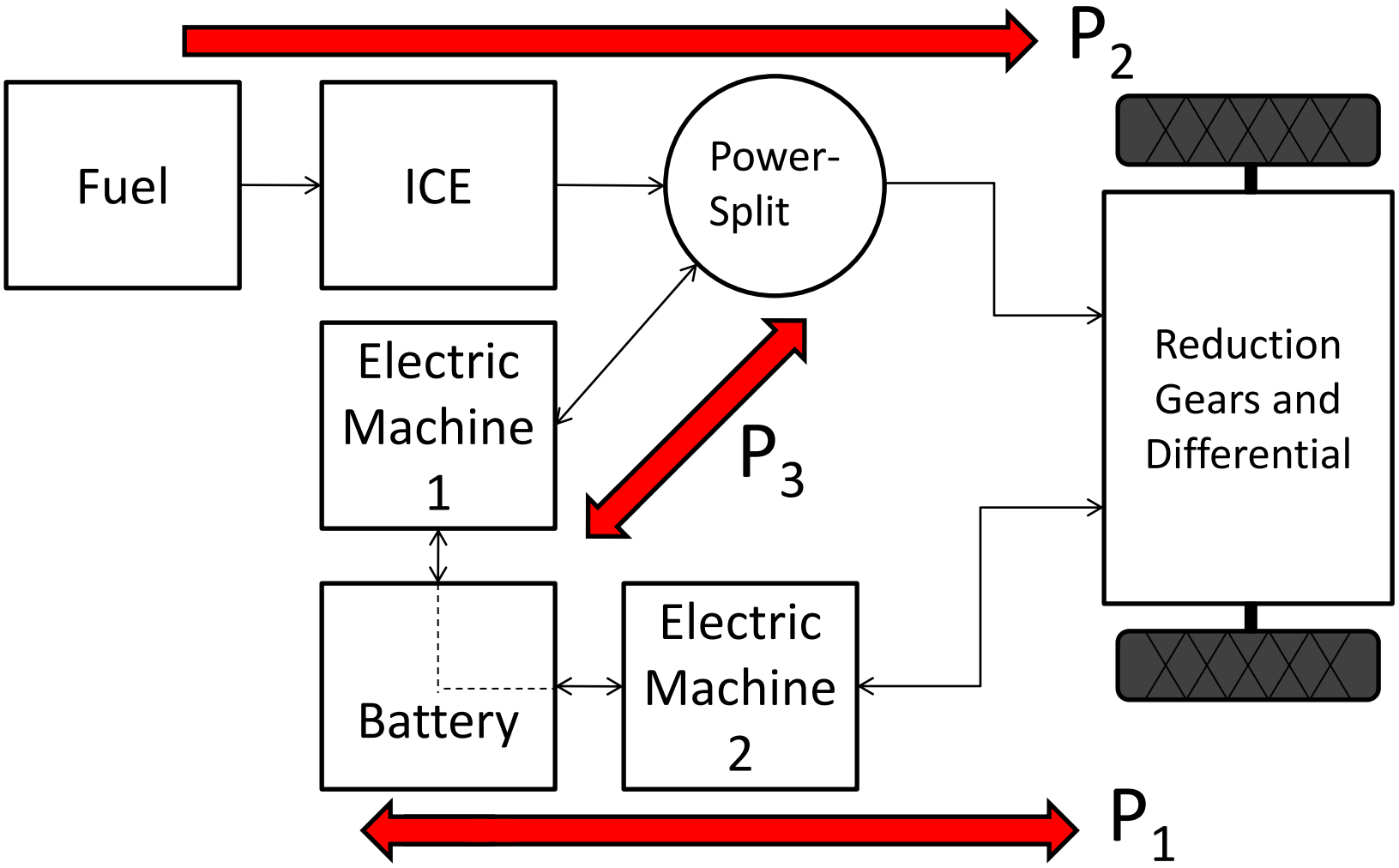

2.5-liter gasoline engine

- Class-leading efficiency and performance due to high speed combustion technology.
- The new engine has a maximum thermal efficiency of 41% - the world' s highest in a mass-produced gasoline engine.

Lithium-ion and nickel-metal hydride batteries

- The new lithium-ion and nickel-metal hydride batteries are both smaller and lighter than before, thus enabling installation under the rear seats.

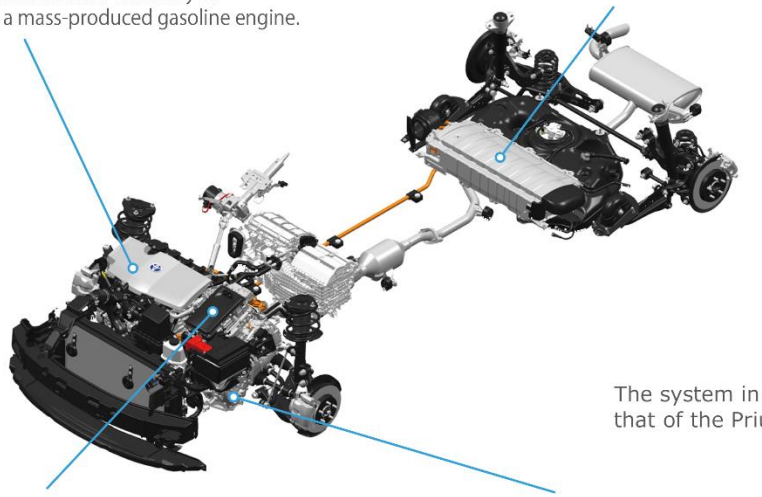

The system in the figure is that of the Prius THS Ⅱ

Power Control Unit (PCU)

- New low-loss components help reduce electrical loss by approximately 10%.
- The new PCU is smaller and lighter than before, which allows it to be placed directly above the transaxle.

Transaxle

- The motor features a new rolling-coil structure with fewer wires, and also uses a newly developed magnetic steel.
  A new parallel reduction gear format helps to reduce the loss in the transaxle.
- A new multi-axis structure for the MG1 and MG2 motors reduces the size and weight of the system.

https://global.toyota/en/powertrain/ths/

Power-Split Operation Modes

1. Pure electric traction – propelled by batteries at low speed
2. Pure ICE traction
3. Hybrid traction – both engine and batteries propel
4. Engine traction and battery charging
5. Regenerative braking
6. Battery charging – ICE propels and electric machine charges battery (at the expense of the ICE)
7. Hybrid battery charging – both ICE (through MG1) and MG2 charge the batteries

Power-Split Advantages and Disadvantages

- Advantages
  - Combines the advantages of a Series and a Parallel
    - Has a direct mechanical path for the ICE, which is very efficient in steady operating conditions like cruising
    - Has an electromechanical path which allows for efficient operation of the ICE in unsteady driving, such as speed variations seen in city driving
- Disadvantages
  - Further complexity and cost

Modes of Operation

- “Charge-sustaining” HEV
  - Prius, Malibu
  - Batteries stay at about the same state of charge over the day
  - No need to charge from the wall
- “Charge-depleting” Plug-in HEV
  - Chevrolet Volt, https://evadoption.com/ev-models/available-phevs/
  - Batteries deplete over the driving day
  - Can charge from the wall

Types of PHEV Strategies

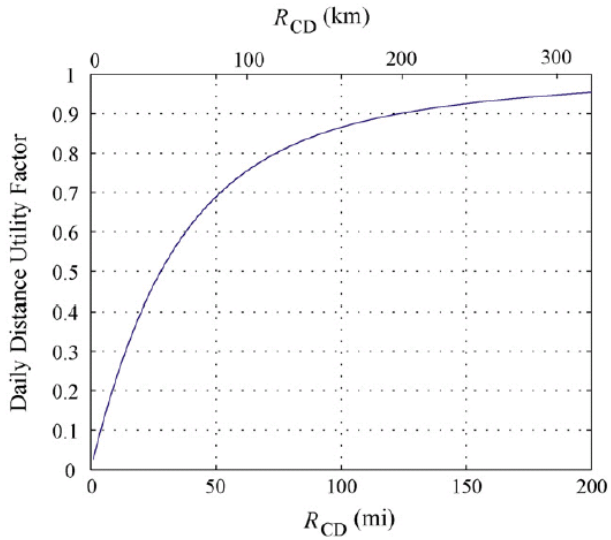

Fig. 2. J2841-type UF derived from the 2001 NHTS.

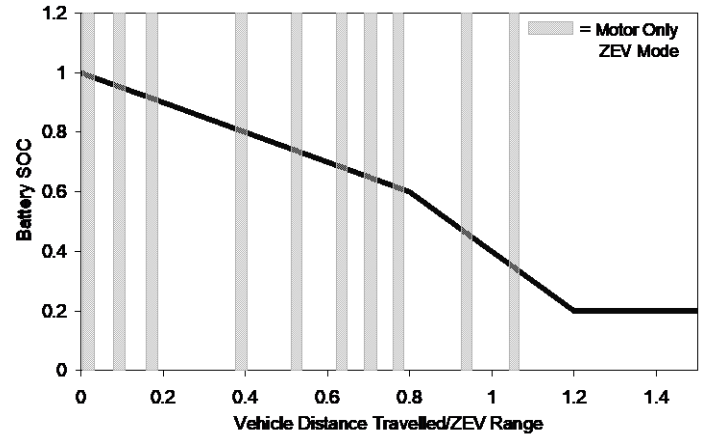

Charge Depleting

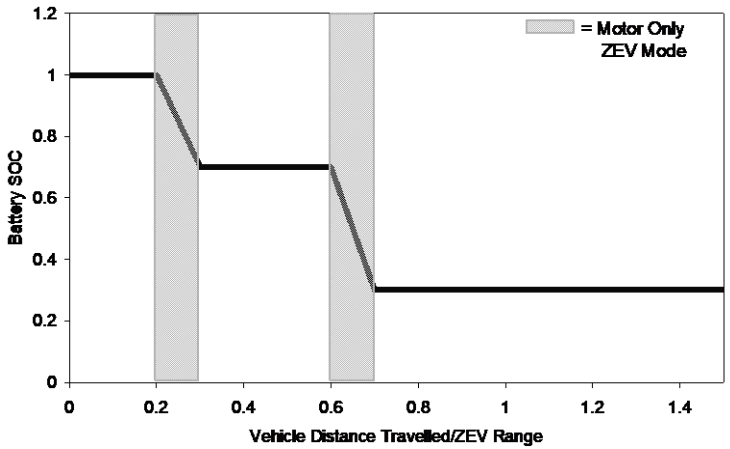

Green Zone

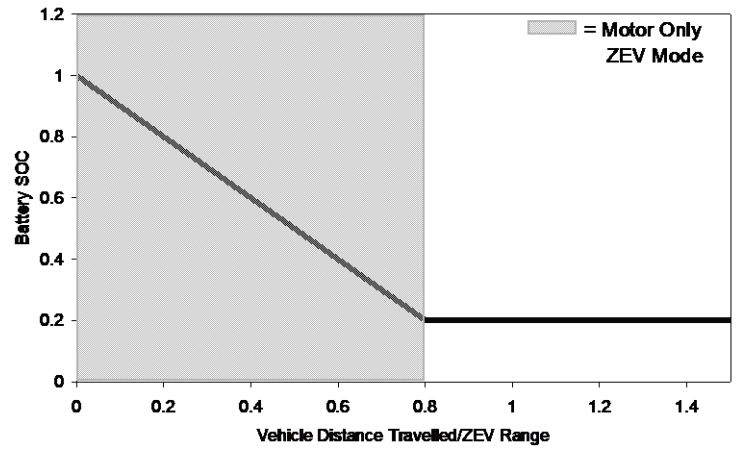

HEVX, Range Extender

Discussion Points

- How far do you drive each day?
- What are the implications of your driving habits for your car purchasing decision?

Degrees of Hybridization – Loose Definitions

(a) Full (or Strong) Hybrid

- Vehicle runs on just the fuel-derived power, just the battery power, or a combination of both
- Requires a large, high-capacity battery pack
- Examples: Toyota Prius, Ford Escape and Fusion Hybrid, GM Two-Mode Hybrid

(b) Power Assist Hybrids (Type of Mild)

- Internal Combustion Engine (ICE) used for primary power, with a small electric machine (EM) between the engine and the transmission
- Motor allows for quick starting of engine (engine can be shut off)
- Regenerative braking possible
- If the EM is large and it can be used as the sole source of propulsion, the PAH can be classified as a strong hybrid
- Example: Honda's Integrated Motor Assist (IMA) – Insight, Civic

Degrees of Hybridization – Loose Definitions

(c) Mild Hybrids

- Any architecture where one power source is much larger than another power source
- E.g., standard starter motor replaced by an oversized one on an otherwise conventional ICE
- Often the alternator becomes the starter
- Engine can be shut-off and restarted quickly like other hybrids (coasting, braking, stopped)
- Motor can also provide modest assist and regenerative braking
- Examples: GM Belt Alternator Starter